13th ewtec 2019

European Wave and Tidal Energy Conference Series

NAPOLI

1st - 6th SEPTEMBER 2019

CENTRO CONGRESSI
STAZIONE MARITTIMA

FINAL PROGRAMME

AKNOWLEDGMENTS TO PARTNERS & SPONSOR

Organized by

CoNISMa
Consorzio Nazionale Interuniversitario per le Scienze del Mare

Università degli Studi della Campania *Luigi Vanvitelli*

Gold Partner, Main sponsor

enel Green Power

Bronze Partner

CASTALIA ITALIAN MARINE ECOLOGY COMPANY

CASTALIA OPERATIONS Srl

TECHNICAL EXHIBITION

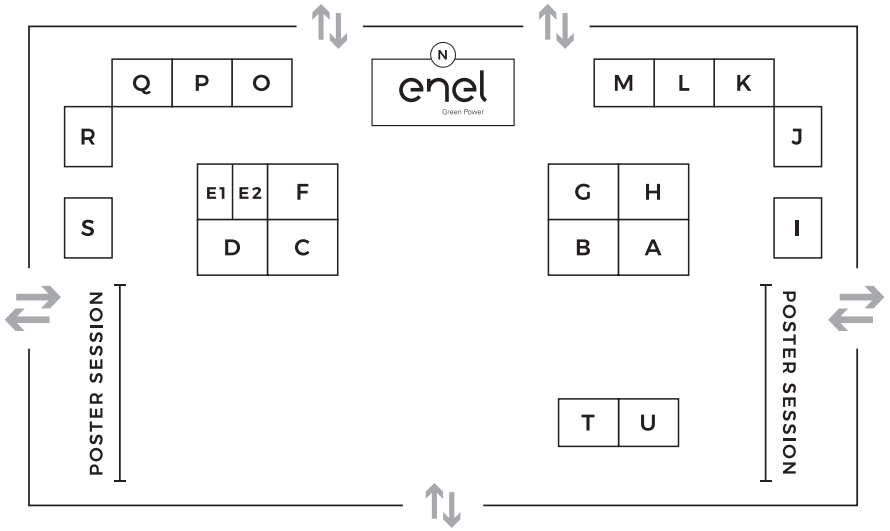

A >> ENI
B >> PRIMaRE - Partnership far Research in Marine Renewable Energy
C >> Università degli Studi Mediterranea di Reggio Calabria
D >> MDPI - Journal of Marine Science and Engineering
E 1 >> Springer
E 2 >> CoNISMa - Italian National InterUniversity Consortium far Marine Sciences
F >> CoNISMa - Italian National InterUniversity Consortium for Marine Sciences
G >> NR-INM - Institute of Marine Engineering - National Council far Research
H >> ENI
I >> Next Geosolutions
J >> Saipem
K >> Marine Renewables Canada
L >> Marine Renewables Canada
M >> Marine Renewables Canada
N >> Enel Green Power
O >> Politecnico di Torino
P >> Politecnico di Torino
Q >> RSE - Ricerca Sistema Energetico
R >> Belfast University
S >> INORE - International Network on Offshore Renewable Energy
T >> Università degli Studi della Campania “Luigi Vanvitelli”
U >> EPF Elettrotecnica

Table of contents

TECHNICAL EXHIBITION 1
TABLE OF CONTENTS 2
WELCOME MESSAGE 3
EWTEC COMMITTEE / LOCAL TECHNICAL COMMITTEE / TECHNICAL COMMITTEE 4
EXECUTIVE BOARD / ABOUT EWTEC / HISTORY OF THE CONFERENCE 5
SCHEDULE AT A GLANCE 6
STAZIONE MARITTIMA 8
MONDAY 2nd SEPTEMBER 10
TUESDAY 3rd SEPTEMBER 16
WEDNESDAY 4th SEPTEMBER 25
THURSDAY 5th SEPTEMBER 35
POSTER SESSION 40
TECHNICAL TOURS AND VISITS 42
SOCIAL PROGRAMME 43
GENERAL INFORMATION 44

facebook.com/ewtec2019

instagram.com/ewtec2019

twitter.com/ewtec2019

DOWNLOAD EWTEC 2019

mobile application at **www.ewtec.org**

Conference office CoNISMa infopoint

+ 39 0685355476 · ewtec2019conferenceoffice@conisma.it

Diego Vicinanza
Chair of
EWTEC 2019

Welcome message

Benvenuti a Napoli!

CoNISMa (National Inter-University Consortium for Marine Sciences) and Università degli Studi della Campania "Luigi Vanvitelli" are pleased to welcome you at the 13th European Wave and Tidal Energy Conference EWTEC2019 which is held at the beautiful city of Napoli, from the 1st to 6th September 2019.

This international scientific conference, which has been held every two years in Europe since 1993, for the first time is hosted in Italy. EWTEC2019 is the occasion to meet for researchers and world-class companies in the marine renewable energy sector and involves the participation of about 600 delegates from 35 different countries. Universities, research centers and private companies are going to meet with the interest to innovate and to speed up access to the market of wave and tidal devices.

Italy hosts an increasing number of actors involved in the development of this sector: big industrial groups, SMEs, start-ups, and several internationally recognized academic institutions.

EWTEC2019 will be an ideal opportunity to meet them all in the pleasant environment of the venue: Centro Congressi della Stazione Marittima di Napoli.

You will discover the beautiful city of Napoli, the bay, the landscape, the rich history, the architecture, and the Italian way of living.

Finally, I want to thank ENEL GREEN POWER as main sponsor, together with CoNISMa who provided the human resources crucial for the success of such event.

I wish you a productive week and enjoyable time in Napoli

EWTEC Committee

EWTEC 2019 is organized by the CoNISMa and University of Campania "Luigi Vanvitelli"
Chairman | **Diego Vicinanza** · CoNISMa and Dep. of Engineering of University of Campania "Luigi Vanvitelli"
Co-Chairman | **Emilio Campana** - CNR National Council for Research
Technical staff of CoNISMa - Italian National Inter-University Consortium for Marine Sciences

Local Technical Committee

Diego Vicinanza and **Pasquale Contestabile** · Università della Campania "Luigi Vanvitelli"
Felice Arena and **Alessandra Romolo** · Università di Reggio Calabria
Domenico Coiro, **Mario Calabrese** and **Mariano Buccino** · Università di Napoli "Federico II"
Eugenio Pugliese Carratelli and **Fabio Dentale** · Università di Salerno
Guido Benassai · Università di Napoli "Parthenope"
Lorenzo Cappietti · Università di Firenze
Arianna Azzellino · Politecnico di Milano
Renata Archetti and **Barbara Zanuttigh** · Università di Bologna
Luca Martinelli and **Piero Ruol** · Università di Padova
Antonino Viviano and **Enrico Foti** · Università di Catania
Paolo Sammarco · Università di Roma "Tor Vergata"
Giovanni Besio · Università di Genova

Technical Committee

Prof. **AbuBakr Bahaj** · University of Southampton, UK
Prof. **Sergio Camporeale** · Politecnico di Bari, Italy
Dr. **Alain H. Clément** · École Centrale de Nantes, France
Dr. **Claes Eskilsson** · Aalborg University, Denmark
Prof. **António Falcão** · Instituto Superior Técnico, Portugal
Dr. **Peter Frigaard** · Aalborg University, Denmark
Prof. **Luis Gato** · Instituto Superior Técnico, Portugal
Dr. **Andrew Grant** · University of Strathclyde, UK
Prof. **Deborah Greaves** · Plymouth University, UK
Dr. **Cameron Johnstone** · University of Strathclyde, UK
Prof. **Mats Leijon** · Uppsala University, Sweden
Prof. **Tony Lewis** · University College Cork, Ireland
Dr. **Christophe Maisondieu** · Ifremer, France
Dr. **Kim Nielsen** · Rambøll, Denmark
Prof. **Tim O'Doherty** · Cardiff University, UK
Prof. **Cesar Vidal Pascual** · University of Cantabria, Spain
Prof. **John Ringwood** · Maynooth University, Ireland
Prof. **António Sarmento** · Wave Energy Centre, Portugal
Prof. **Jan Sundberg** · Uppsala University, Sweden
Dr. **Gareth Thomas** · University College Cork, Ireland
Prof. **Diego Vicinanza** · Università degli Studi della Campania "Luigi Vanvitelli", Italy

Executive board

Professor Cameron Johnstone
Chair
University of Strathclyde

Dr Peter Frigaard
Deputy Chair
Chair EWTEC 2013
Aalborg University

Dr Gareth Thomas
Treasurer
University College Cork

Professor AbuBakr S. Bahaj
Secretariat
Chair EWTEC 2011
University of Southampton

Professor Diego Vicinanza
Chair EWTEC 2019
Università degli Studi della Campania "Luigi Vanvitelli", Italy

Professor Tony Lewis
Chair EWTEC 2017
University College Cork, Ireland

About EWTEC

The European Wave and Tidal Energy Conference (EWTEC) series are international, technical and scientific conferences, focused on ocean renewable energy and widely respected for their commitment to maintain high standards in the quality of academic and industrial contributions to their proceedings.

EWTEC is well established among renewable energy conferences showing considerable growth since its launch in 1993.

History of the Conference

	SUNDAY 1st September	MONDAY 2nd September					TUESDAY 3rd September				
8h00 9h00		LATE REGISTRATION					LATE REGISTRATION				
9h00 10h20		PLENARY SESSION Room DIONE+ELETTRA+PERSEIDE+AGAPE+CALIPSO					WRC Room ELETTRA	WHM Room DIONE	TDD Room CALIPSO	WDD Room PERSEIDE	THM Room AGAVE
10h20 10h40		COFFEE BREAK					COFFEE BREAK				
10h40 12h20		KEY NOTE LECTURES Room DIONE+ELETTRA+PERSEIDE+AGAPE+CALIPSO					WRC Room ELETTRA	WHM Room DIONE	TDD Room CALIPSO	WDD Room PERSEIDE	THM Room AGAVE
12h20 14h00		LUNCH BREAK					LUNCH BREAK				
14h00 15h20	REGATTA GULF OF NAPLES	THM Room ELETTRA	WHM Room DIONE	EIA Room CALIPSO	WDD Room PERSEIDE	GPC Room AGAVE	ONM Room ELETTRA	WHM Room DIONE	TDD Room CALIPSO	WDD Room PERSEIDE	EIA Room AGAVE
15h20 15h40		COFFEE BREAK					COFFEE BREAK				
15h40 17h20		THM Room ELETTRA	WHM Room DIONE	EIA Room CALIPSO	WDD Room PERSEIDE	GPC Room AGAVE		WHM Room DIONE	TDD Room CALIPSO	WDD Room PERSEIDE	EIA Room AGAVE
17h40 19h00	Registration Desk Opening	SIDE EVENTS	SIDE EVENTS	SIDE EVENTS	SIDE EVENTS	SIDE EVENTS	SIDE EVENTS	SIDE EVENTS	SIDE EVENTS	SIDE EVENTS	SIDE EVENTS
19h00 20h00											
20h00 21h00	WELCOME RECEPTION and COCKTAIL	COCKTAIL					DINNER TRACK DIRECTORS				
21h00 22h30											

LEGEND	THM	Tidal hydrodynamic modelling	WDD	Wave device development and testing	
	WHM	Wave hydrodynamic modelling	GPC	Grid integration, power take-off and control	
	EIA	Environmental impact and appraisal	WRC	Wave resource characterization	

	WEDNESDAY 4th September					THURSDAY 5th September					FRIDAY 6th September
8h00 9h00	LATE REGISTRATION					LATE REGISTRATION					POST TOUR
9h00 10h20	TRC Room ELETTRA	WHM Room DIONE	TDD Room CALIPSO	WDD Room PERSEIDE	ESP Room AGAVE	SMM Room ELETTRA	THM Room DIONE	TRC Room CALIPSO	WDD Room PERSEIDE		
10h20 10h40	COFFEE BREAK					COFFEE BREAK					
	TRC Room ELETTRA	WHM Room DIONE	TDD Room CALIPSO	WDD Room PERSEIDE	ESP Room AGAVE	SMM Room ELETTRA	THM Room DIONE	TRC Room CALIPSO	WDD Room PERSEIDE	GPC Room AGAVE	
12h20 14h00	LUNCH BREAK					FAREWELL LUNCH & CLOSING SESSION					
14h00 15h20	GPC Room ELETTRA	WHM Room DIONE	TDD Room CALIPSO	WDD Room PERSEIDE	ESP Room AGAVE	WORKSHOPS					*Pompei & Napoli*
15h20 15h40	COFFEE BREAK										
15h40 17h20	GPC Room ELETTRA	THM Room DIONE	ONM Room CALIPSO	WDD Room PERSEIDE	SMF Room AGAVE	TECHNICAL TOUR					
17h40 19h00	SIDE EVENTS	SIDE EVENTS	SIDE EVENTS	SIDE EVENTS	SIDE EVENTS	SIDE EVENTS					
19h00 20h00	GALA DINNER										
20h00 21h00											
21h00 22h30											

ONM	Operations, maintenance and decommissioning	ESP	Economical, social, legal and political aspects of ocean energy	LEGEND	
TDD	Tidal device development and testing	SMF	Station-keeping, moorings and foundations		
TRC	Tidal resource characterization	SMM	Structural mechanics - materials, fatigue, loadings		

STAZIONE MARITTIMA

FIRST FLOOR

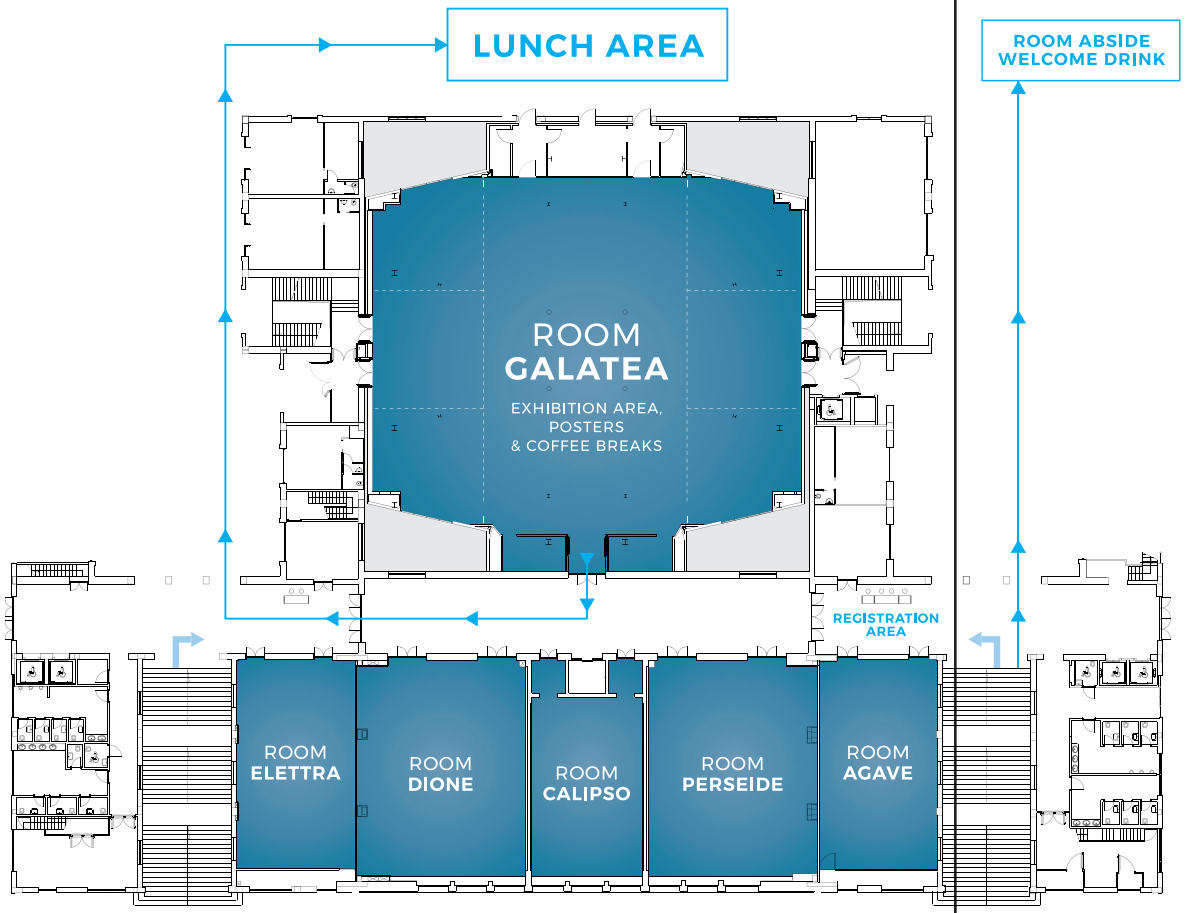

SECOND FLOOR

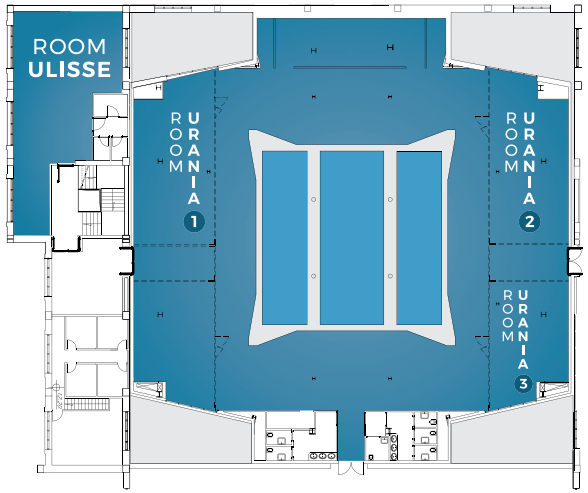

WiFi FREE

MONDAY 2nd

8.00 9.00	REGISTRATION DESK OPENING
	Rooms | DIONE-ELETTRA-PERSEIDE-AGAPE-CALIPSO
9.00 9.20	PLENARY OPENING SESSION **Prof. Diego Vicinanza** | Chairman EWTEC2019 **Prof. Lucia Altucci** | Prorector Università degli studi della Campania "Luigi Vanvitelli" **Prof. Antonio Mazzola** | CoNISMa President
9.20 10.20	Welcome Address *by* **Local Authorities and ENEL GREEN POWER representatives**
10.20 10.45	COFFEE BREAK VISIT OF THE EXHIBITION POSTER SESSION OPENING
	KEY NOTE LECTURES
10.45 11.15	***Wave and tidal energy – state of the art and what lies ahead*** **Prof. AbuBakr Bahaj** | University of Southampton
11.15 11.45	***Italian Wave and Tidal Energy - state of the art and perspectives*** **Dr. Emilio Campana** | Director of Engineering Department, CNR
11.45 12.30	SPEECHES *by* **National and International Authorities**
12:30 14:00	LUNCH BREAK

MONDAY 2nd

THM Tidal Hydrodynamic Modelling — **ROOM ELETTRA**

CHAIR T. O'Doherty and F. Salvatore

Time	ID	Title	Authors name
14.00 14.20	1219	Predicting and optimizing the energy-generation performance of an instream turbine operating with twin, unconfined, counter-rotating screws by means of CFD Modeling	A. Lamoureux, D. J. M. Baker, J. Doyon, and R. Sinclaire
14.20 14.40	1303	CFD surface effects on flow conditions and tidal stream turbine performance	C. Lloyd, M. Allmark, R. Ellis, S. Ordonez, A. Mason-Jones, C. Johnstone, T. O'Doherty, G. Germain and B. Gaurier
14.40 15.00	1840	Variable-fidelity CFD modelling of horizontal-axis tidal turbines and arrays	G. Dubbioso, F. Salvatore, Z. Sarichloo, D. Calcagni, R. Muscari, R. Starzmann
15.00 15.20	1372	Numerical modelling of an undulating membrane tidal energy converter	M. Trasch, A. Chambon, A. Deporte, J-B. Drevet, G. Germain, D. Lemosse, G. Pinon
15.20 15.40	**Coffee Break**		
15.40 16.00	1629	Design of a horizontal axis marine current turbine with dedicated hydrofoil sections	Francisco Espenica, R.B. Santos Pereira, J. Baltazar and J.A.C. Falcão de Campos
16.00 16.20	1638	Design and optimization of hydrofoils tailored for marine current turbines	Francisco Espenica, R.B. Santos Pereira, G.L. Oliveira Andrade, J. Baltazar and J.A.C. Falcão de Campos
16.20 16.40	1738	Hydroelastic modelling of flapping foils operating as flow and wave energy devices	D. Anevlavi, E. S. Filippas, A. Karperaki and K. A. Belibassakis
16.40 17.00	1739	A GPU-accelerated method for the hydrodynamic analysis of a biomimetic flappingfoil device for marine energy extraction	Panagiotis E. Koutsogiannakis, Evangelos S. Filippas, and Kostas A. Belibassakis
17.00 17.20	1456	Influence of Yaw Misalignment on the propagation of Tidal Turbine Wake	Pranav K. Modali, Ashwin Vinod, and Arindam Banerjee
17.30 19.00	**PRIMRE - SANDIA** | Side Event **PRIMRE** ***(Portal and Repository for Information on Marine Renewable Energy)*** ***The U.S. Integrated System for Accessing Data*** ***Chair:*** *Andrea Copping and Kelley Ruehl*		

MONDAY 2nd

WHM	Wave Hydrodynamic Modelling	ROOM DIONE

CHAIR G. Thomas and L. Cappietti

Time	ID	Title	Authors name
14.00 14.20	1279	Definition of metrics and significance hydrodynamic mode-maps for BEM mesh convergence analysis	Simone Giorgi, Ronan Costello and Ben Kennedy
14.20 14.40	1280	A novel wave-energy device with enhanced wave amplification and induction actuator	O. Bokhove, A. Kalogirou, D. Henry, and G. Thomas
14.40 15.00	1360	Numerical simulation of the full non-linear behaviour of Wave Energy Converters	A. J. C. Crespo, M. Brito, J. M. Domínguez, R, B. Canelas, M. Hall, C. Altomare, M. Wu, V. Stratigaki, P. Troch, L. Cappietti, R. M. Ferreira, M. Gómez-Gesteira
15.00 15.20	1414	Development towards a nested hydrodynamic model for the numerical analysis of ocean wave energy systems	Jost Kemper, Christian Windt, Kai Graf and John V. Ringwood
15.20 15.40	**Coffee Break**		
15.40 16.00	1504	Significant motions of a multi-purpose floating offshore structure due to environmental conditions	T.P. Mazarakos, D.N. Konispoliatis, T.H. Soukisian, and S.A. Mavrakos
16.00 16.20	1519	Performance assessment of different RANS turbulence models in numerical simulations for BH-OWSC	Duy Tong Nguyen, Yi-Chih Chow, Jiahn-Horng Chen, and Chen-Chou Lin
16.20 16.40	1682	Development of WEC Design Loads: A Comparison of Numerical and Experimental Approaches	Brian J. Rosenberg, Tim R. Mundon, Ryan G. Coe, Eliot W. Quon, Chris C. Chartrand, Yi-Hsiang Yu, and Jennifer van Rij
16.40 17.00	1672	Numerical modelling of a point-absorbing WEC model using DualSPHysics coupled with a multiphysics library	B. Tagliafierro, A. J. C. Crespo, J. M. Domínguez, O. García-Feal, M. Gómez-Gesteira, R. B. Canelas, R. G. Coe, G. Bacelli, H. Cho, S. J. Spencer, G. Viccione
17.00 17.20	1389	Geometric optimization of a hinge-barge wave energy converter	LiGuo Wang, and John V. Ringwood
17.30 19.00	**ENEL GREEN POWER** | Side Event		

Industrial roll out of ocean energy: a utility perspective

Chair: *Fabio Fugazzotto, Head of Marine innovation - ENEL GREEN POWER*

EIA	Environmental impact and appraisal	ROOM CALIPSO

CHAIR A. Copping and A. Azzellino

Time	ID	Title	Authors name
14.00 14.20	1499	Estimating the stability of a bed protection downstream of a weir-mounted tidal turbine	Merel C. Verbeek, Robert Jan Labeur, Wim S. J. Uijttewaal
14.20 14.40	1508	Influence of Tidal Energy Converters on Sediment Dynamics in Tidal Channel	C. Auguste, J.-R. Nader, P. Marsh, and R. Cossu
14.40 15.00	1641	Incorporating different tidal energy device designs into 4D collision risk simulations allowing increased flexibility for industry	N. Horne, R. Culloch, P. Schmitt and L. Kregting
15.00 15.20	1756	The environmental effects of utilising tidal current energy devices for energy output	Qui R. See, Sinead Kelly and Fergal O'Rourk
15.20 15.40	**Coffee Break**		
15.40 16.00	1240	Effects from Wave Power Generators on the Distribution of two Sea Pen Species on the Swedish West Coast	Anke Bender, Jan Sundberg
16.00 16.20	1488	Salmonid response to a vertical axis hydrokinetic turbine in a stream aquarium	Madeleine Berry, Jan Sundberg, and Francisco Francisco
16.20 16.40	1683	Numerical modelling of the impact of hydrokinetic turbine on the morphology of the near sandy bed	F. Khaled, S. Guillou, Y. Méar and F. Hadri
16.40 17.00	1496	Comparison of biofouling communities among European regions	Pedro A. Vinagre, Enara Mardaras, Emiliano Pinori, Johan Svenson, Erica Cruz, Teresa Simas
17.00 17.20	1757	Energy and carbon audit of a tidal array equipped with an innovative power take-off	Miguel Santos-Herran, Encarni Medina-Lopez, Lindsey Entwistle, Henry Jeffrey
17.30 19.00	**WES** | Side Event		

Making Wave Energy Work - progress and plans in WES

Chair: *Elva Bannon, Senior Research Engineer, Wave Energy Scotland*

MONDAY 2nd

MONDAY 2nd

WDD	Wave device development and testing	ROOM PERSEIDE

CHAIR C. Eskilsson and A. Viviano

Time	ID	Title	Authors name
14.00 14.20	1612	Simulation of a Resonance-Amplified Floater Oscillation in an Open-Type Circular Caisson	Yan-Xiang Lin, Da-Wei Chen, and Jiahn-Horng Chen
14.20 14.40	1401	Small scale optimization of an OWC device	Antonino Viviano, Stefania Naty, Rosaria E. Musumeci, and Enrico Foti
14.40 15.00	1839	Experimental Study on Performance Analysis of Oscillating Water Column Wave Energy Converter Integrated into Breakwater	Sewan Park, Kyong-Hwan Kim, Kwang Ho Lee, Jeong-Seok Kim, Bo-Woo Nam, Keyyong Hong
15.00 15.20	1796	Overview on the installation of a U-Oscillating Water Column breakwater in the Port of Salerno	Felice Arena, Alessandra Romolo, Giovanni Malara, Valentina Laface, Elena Valentino, Francesco Messineo
15.20 15.40	Coffee Break		
15.40 16.00	1713	Efficiency of Wave Energy converters off the Sicilian Channel	Carlo Lo Re, Giorgio Manno, Giovanni Besio and Giuseppe Ciraolo
16.00 16.20	1730	New method for modelling air compressibility in OWC devices	P. Benreguig, J. Murphy
16.20 16.40	1224	Efficiency of an array of OWC devices equipped with air turbines with pitch control	D.N. Konispoliatis, T.P. Mazarakos, E. Katsidoniotaki, A. Vamiadakis, T.H. Soukissian, S.A. Mavrakos
16.40 17.00	1465	Hydrodynamic analysis of a full-scale U-OWC breakwater: comparison between analytical models and CFD simulations	Luana Gunari, Pasquale Filianoti, Sergio M. Camporeale, Marco Torresi
17.00 17.20	1523	Experimental compressibility study on a Coaxial-Duct OWC	J. C. C. Portillo, A. F. O. Falcao, J. C. C. Henriques, and L. M. C. Gato

GPG	Grid integration, power take-off and control	ROOM AGAVE

CHAIR J. Ringwood and J. Henriques

Time	ID	Title	Authors name
14.00 14.20	1228	Speed control of multiple tidal turbines connected to a shared onshore converter	S. Reynolds, A. Kiprakis, M. Abusara
14.20 14.40	1436	An initial characterisation of a tidal stream turbine on a drive train test rig	E. Rojo-Zazueta, M. Allmark, P. Prickett, R. Grosvenor
14.40 15.00	1597	Feasibility of Magnetic Continuously Variable Transmission Concept within a Tidal Turbine Power Train	A. Harris, B. McGilton, and M. Mueller
15.00 15.20	1250	Speed converter controlled river turbines	K. S. Han
15.20 15.40	Coffee Break		
15.40 16.00	1421	Peak-shaving control { a new control paradigm for OWC wave energy converters	J. C. C. Henriques, A. A. D. Carrelhas, L. M. C. Gato, A. F. O. Falcao, and J. C. C. Portillo
16.00 16.20	1262	Sliding Mode Control of an Array of Three Oscillating Water Column Wave Energy Converters to Optimize Electrical Power	M. E. Magaña, D. R. Brown, D. T. Gaebele, J. C. C. Henriques and T. K. A. Brekken
16.20 16.40	1267	Preliminary validation of a 1MW oscillating wave surge converter WEC-Sim model	P. Laporte Weywada, J. Cruz, J. Scriven, M. Vuorinen and T. Maki
16.40 17.00	1586	Numerical Benchmarking of selected Efficiency-Aware Reactive Control Strategies on the InfinityWEC Wave Energy Converter	A. Rashid, and M. Sidenmark
17.00 17.20	1705	Discrete-time causal control of WECs with finite stroke, in stochastic waves	J.T Scruggs, Y. Lao, M. Previsic and A. Karthikeyan

MONDAY 2nd

TUESDAY 3rd

WRC	Wave resource characterization	ROOM ELETTRA

CHAIR E. Pugliese Carratelli and F. Dentale

Time	ID	Title	Authors name
9.00 9.20	1491	Wave energy projections in Western Indian Ocean; a regional assessment for southeast Africa	B. Kamranzad, N. Mori
9.20 9.40	1560	Performance Analysis of Wave Energy Resources at a WEC Test Site in Keelung, Taiwan	S. Y. Tzang, Y. L. Chen, H. Z. Chen, J.H. Chen, Y. H. Lee, Y. C. Chow
9.40 10.00	1225	Wind effects in the parametrisation of physical characteristics for a nearshore wave model	George Lavidas and Henk Polinder
10.00 10.20	1574	Advanced measurement and analysis of waves and turbulence using 5, 7 or 8 beams ADCPs	Eloi Droniou, Matt Folley, Yves Perignon and Cuan Boake
10.20 10.40	**Coffee Break**		

CHAIR Zhaoqing Yang and Giovanni Besio

10.40 11.00	1553	Marine energy resource characterization, classification and assessment in the U.S.	L. Kilcher, Z. Yang, V. Neary
11.00 11.20	1469	High-resolution Hindcasts for U.S. Wave Energy Resource Characterization	Zhaoqing Yang and Vincent S. Neary
11.20 11.40	1347	Model performance predicting extreme wave heights for project risk assessment and WEC design	Vincent S. Neary, Bibiana Seng, Zhaoqing Yang, Nabi Allahdadi, Ruoying He, and Taiping Wang
11.40 12.00	1556	Marine Energy Classification Systems: Tools for resource assessment and design	Vincent S. Neary, Kevin A. Haas, and Jonathan A. Colby
12.00 12.20	1658	Wave energy resource classification system as characterization and assessment tool: Application to the US coast	Kevin A. Haas, Seongho Ahn, and Vincent S. Neary
12.20 14.00	**Lunch Break**		

WHM	Wave hydrodynamic modelling	ROOM DIONE

CHAIR P. Sammarco and E. Di Lauro

Time	ID	Title	Authors name
9.00 9.20	1285	Numerical study of an inclined OWC chamber combined breakwater and turbine interaction under waves	J.S. Kim, B.W. Nam, K.H. Kim, S.W. Park, K. Hong
9.20 9.40	1296	Wave power extraction from a multi OWC platform	Siming Zheng, Alessandro Antonini, Yongliang Zhang, Jon Miles, Gregorio Iglesias
9.40 10.00	1747	Numerical simulation study on the offshore oscillating water column OWC integrated into a floating breakwater using CFD	M. H. Ghodsi, M. Shegeft
10.00 10.20	1797	Hydrostatic Stability of Floating Oscillating Water Columns	Krish Thiagarajan Sharman
10.20 10.40	**Coffee Break**		
10.40 11.00	1371	Weakly nonlinear theory of an array of surging wave energy converters with curved geometry	S. Michele, E. Renzi and P. Sammarco
11.00 11.20	1724	The integration of a hybrid Wave Energy Converter in port breakwaters	Luciana das Neves, Zafar Samadov, Enrico Di Lauro, Kevin Delecluyse, Piet Haerens
11.20 11.40	1464	Hydrodynamic performance of an array of Wave Energy Converters in front of a vertical wall	E. Loukogeorgaki and I. K. Chatjigeorgiou
11.40 12.00	1791	Wave loads on the OBREC device in a real wave climate	G. Palma, S. Formentin, B. Zanuttigh, P. Contestabile, D. Vicinanza
12.00 12.20	1585	Metrics for Wave Energy Converter Hull Geometry Optimisation	A. Garcia-Teruel, D. Forehand, and H. Jeffrey
12.20 14.00	**Lunch Break**		

TUESDAY 3rd

TUESDAY 3rd

CCP	CCP-WSI Blind Test Series 2	ROOM DIONE

CHAIR E. J. Ransley and D. Greaves

Time	ID	Title	Authors name
14.00 14.20	1448	Finite-Order hydrodynamic Approximation by Moment-Matching (FOAMM) toolbox for wave energy applications	Y. Pena-Sanchez, N. Faedo, M. Penalba, G. Giorgi, A. Merigaud,C. Windt, D. G. Violini, L. Wang and J. V. Ringwood
14.20 14.40	1294	CCP-WSI Blind Test Series 2: Assessment of focused wave impacts on floating WECs using OpenFOAM	Scott A. Brown, Edward J. Ransley, Deborah Greaves
14.40 15.00	1274	CCP-WSI Blind Test Series 2: A Nonlinear Froude-Krylov Modelling Approach	Giuseppe Giorgi
15.00 15.20	1265	Contribution to the CCP-WSI Blind Test Series 2: CFD-based numerical wave tank experiments employing an impulse source wave maker	Christian Windt, Josh Davidson, Pal Schmitt and John V. Ringwood
15.20 15.40	**Coffee Break**		
15.40 16.00	1480	Application of a hybrid Eulerian Lagrangian PIC model to focused wave interaction with WEC type floating buoys	Qiang Chen, Haoyu Ding, and Jun Zang
16.00 16.20	1450	CCP-WSI Blind Test 2: Modelling Focused Wave Interactions with Floating Structures with WEC-Sim	Jack Hughes, Alison Williams and Ian Masters
16.20 16.40	1452	Numerical Simulation of Focused Wave Interaction with WECs using a Hybrid FNPT/NS Solver	S. Yan, J.X. Wang, Q.W. Ma, J.H. Wang, and Z.H. Xie
16.40 17.00	1463	Simulation of focused wave impact on point absorber wave energy converters - CCP-WSI Blind Test Series 2	Zaibin Lin, Ling Qian, Zhihua Ma, Hao Chen, Derek Causon, and Clive Mingham
17.00 17.20	1483	Validation of Simulated Wave Energy Converter Responses to Focused Waves for CCP-WSI Blind Test Series 2	Jennifer van Rij, Yi-Hsiang Yu, and Nathan Tom
	ENEL GREEN POWER | Side Event		
17.30 19.00	***Ocean Energy: an open innovability approach to catch future opportunities*** ***Chair:*** *Fabio Fugazzotto, Head of Marine innovation - ENEL GREEN POWER*		

WDD	Wave device development and testing	ROOM PERSEIDE

CHAIR P. Rosa-Santos and L. Cavallaro

Time	ID	Title	Authors name
9.00 9.20	1306	Preliminary design of a hybrid wave energy converter integrated into a rubble mound breakwater	A. Sinha, P. Mendonça, F. Belga, H. Cestaro, T. Morais, D. Clemente, T. Cabral, F. Taveira-Pinto, P. Rosa-Santos, H.Guedes Lopes
9.20 9.40	1399	Analytical and physical modelling of a quayside Wave Energy Converter (WEC) and study of its impact on overtopping	S. Neuv´eglise, G. Perret, H. Smaoui, F. Marin and P. Sergent
9.40 10.00	1309	Performances of a breakwater for wave energy conversion	Castiglione F., Cavallaro L., Iuppa C., Contestabile P., Vicinanza D., and Foti E.
10.00 10.20	1238	Modelling and Testing of Hydraulic Power Take off for Wave Energy Converter on Artificial Breakwater	Jianan Xu, Tao Xu, and Yansong Yang
10.20 10.40	**Coffee Break**		
10.40 11.00	1530	AZURA WEC power performance - a preliminary comparison of trial data and numerical modelling results	Krishnakumar Rajagopalan, Patrick Cross, Bradley Ling, and Terry Lettenmaier
11.00 11.20	1575	Recent developments at the U.S. Navy wave energy test site	P. Cross, K. Rajagopalan, A. Druetzler, A. Argyros, J. Joslin, E. Hjetland, A. Stewart
11.20 11.40	1383	Laboratory experiments on the performance of an OWC-WEC: fixed condition versus floating platform-embodied condition	Lorenzo Cappietti, Irene Simonetti, Ilaria Crema
11.40 12.00	1444	Results of Wave Energy Experiments in the Maldives	T. Shintake, K. Shirasawa, J. Fujita, S. Misumi, P. Halder, T. Nagahama, T. Shindou, H. Taggart, H. Kamimura and H. Takebe
12.00 12.20	1492	Wave Power Measurement at Breaking Wave Zone in Maldives using Horizontal-Axis Turbine WEC	H. Takebe, K. Shirasawa, J. Fujita, S. Misumi, P. Halder and T. Shintake
12.20 14.00	**Lunch Break**		
17.30 19.00	**WaveSPARC** | Side Event **WaveSPARC: Structured Innovation Experience** ***Chair:*** *Jochem Weber, NREL & Ronan Costello, Wave Venture*		

TUESDAY 3rd

TUESDAY 3rd

WDD	Wave device development and testing	ROOM PERSEIDE

CHAIR C. Lugni and P. Frigaard

Time	ID	Title	Authors name
14.00 14.20	1824	Preliminary study on a novel hybrid wave surge energy converter for nearshore applications	G. Boccalero, C. Jean-Mistral, S. Chesne, E. Mignot and N. Riviere
14.20 14.40	1809	Energy harvesting from waves using tandem floaters connected by piezoelectric beams	D. Dessi, G. Leonardi, and F. Passacantilli
14.40 15.00	1659	Numerical and experimental test on a large scale model of a pivoting wave energy conversion system	Domenico P. Coiro, Giancarlo Troise, Nadia Bizzarrini, Luca Castellini and Guido Lazzerini
15.00 15.20	1433	Gyroscopically enhanced vertical axis pendulum for wave energy conversion	L. M. Masturi, H. Hendrikse, A. J. Laguna, and A. V. Metrikine
15.20 15.40	Coffee Break		

CHAIR E. Di Lauro and J. Cândido

15.40 16.00	1628	The WETFEET Project – A disruptive approach to wave energy	Jose Cândido, Antonio Sarmento, Fred E. Gardner,Luis M. C. Gato, Marco Fontana, Keri Collins
16.00 16.20	1647	The performance of the Mocean M100 wave energy converter described through numerical and physical modelling	J. Cameron McNatt, and Christopher H. Retzler
16.20 16.40	1357	Development and assessment of a new geometry for CECO wave energy converter	Paulo Rosa-Santos, Francisco Taveira-Pinto, Claudio A. Rodríguez, Gonçalo Coelho, Daniel Clemente, Hélio Mendonça, A. Paulo Moreira
16.40 17.00	1234	New MoonWEC concept and its device optimization	Adria Moreno Miquel, Renata Archetti
17.00 17.20	1762	Site selection for scaled open water testing of a wave energy converter	Niall D. McLean, Matthew A. Holland, Ruairi D. Maciver and Elva B. Bannon

TDD	Tidal device development and testing	ROOM CALIPSO

CHAIR C. Johnstone and R. Murray

Time	ID	Title	Authors name
9.00 9.20	1434	Climate Power Plant for Water Safety and Renewable Energy	Jacob van Berkel, Jan H. Maas, Samantha J. van Schaick and Andreas Heutink
9.20 9.40	1674	Advancing IEC standardization and certification for tidal energy converters	Peter Scheijgrond , Anna Southall, Claudio Bittencourt, Peter Davies, Pieter Mathys, Grégory Germain, Martijn Geertzen & al.
9.40 10.00	1771	From France to the Philippines: pioneering tidal stream energy	J. Allo
10.00 10.20	1432	Playing with Currents	J.H. Maas, S.J. van Schaick and J. van Berkel
10.20 10.40	Coffee Break		
10.40 11.00	1403	On the Effect of Elastic Blade Deformation on the Performance of a Horizontal Axis Tidal Current Turbine	Nicholas Kaufmann, Thomas H. Carolus, and Ralf Starzmann
11.00 11.20	1427	Influence of Near-blade hydrodynamics on Cross-flow Turbine performance	Abigale Snortland, Brian Polagye, and Owen Williams
11.20 11.40	1461	Morphing blades for passive load control of tidal turbines	W. Dai, G. Pisetta, I. M. Viola
11.40 12.00	1468	Demonstration of blade pitch control for horizontal-axis tidal turbines	Katherine Van Ness, Craig Hill, Alberto Aliseda, Brian Polagye
12.00 12.20	1769	Fault analysis of a marine current vertical-axis turbine missing two blades	Minh Thao Nguyen, Johan Forslund, Karin Thomas, and Anders Goude
12.20 14.00	Lunch Break		

TUESDAY 3rd

TUESDAY 3rd

TDD	Tidal device development and testing	ROOM CALIPSO

CHAIR S. Ordoñez-Sánchez and D. Coiro

Time	ID	Title	Authors name
14.00 14.20	1338	Model scale testing of multi-rotor arrays designed to exploit constructive interference effects	James McNaughton, Bowen Cao, Christopher R. Vogel, and Richard H.J. Willden
14.20 14.40	1377	Full and Model Scale Testing of Two Different Rotor Diameters for Instream Power Generation	Ralf Starzmann, Nicholas Kaufmann and Penny Jeffcoate
14.40 15.00	1495	Influence of turbulence and wave flow conditions on different scaled tidal turbines	G.Pinon, C. El Hadi, M. Slama, J. Nuno, P. Mansilla, E. Nicolas, J. Marcille, J.V. Facq, I. Belarbi, B. Gaurier, G. Germain, A. Pacheco and M. Togneri
15.00 15.20	1692	Design and testing of a full-scale 2 MW tidal turbine blade	E. M. Fagan, F. Wallace, Y. Jiang, and J. Goggins
15.20 15.40	Coffee Break		
15.40 16.00	1639	Experimental and numerical analysis of GEMSTAR, a tethered tidal current energy harvester	D.P. Coiro, G. Troise, N. Bizzarrini and G. Lazzerini
16.00 16.20	1328	Motion tracking of a free-yawing floating tidal stream turbine platform	Thomas Lake, Alison Williams, and Ian Masters
16.20 16.40	1539	A Floating/Submersible Shrouded Tidal Current Turbine System Applicable in Low Speed Tidal Flow	Yusaku Kyozuka, Daisaku Sakaguchi, Makoto Sueyoshi and Changhong Hu
16.40 17.00	1635	Improving tidal turbine efficiency using winglets	Anna M. Young, Amanda S. M. Smyth, Viraj Bajpai, Ruth F. Augarde, Judith R. Farman, and Carl L. Sequeira
17.00 17.20	1346	Experimental study of the wall-mounted cylinder wake effects on a tidal turbine behaviour compared to free stream turbulence	Maria Ikhennicheu, Benoit Gaurier, Gregory Germain, Philippe Druault, Gregory Pinon and Jean-Valery Facq
17.30 19.00	**RealTide Project Side Event** | Side Event		

Improved reliability of devices and better knowledge of real tidal flow characteristics: The keys to achieving market entry of tidal

Side event Co-chaired by:

- *Dr. Jan Erik HANSSEN (1-Tech SPRL, Belgium)*
- *Stéphane PABEUF (Bureau Veritas, France)*
- *Dr. Brian SELLAR (Edinburgh University, Scotland)*

TUESDAY 3rd

THM	Tidal hydrodynamic modelling	ROOM AGAVE

CHAIR L. Blunden and A. Bahaj

Time	ID	Title	Authors name
9.00 9.20	1654	Review of tidal turbine wake modelling methods—state of the art	E. Jump, A. Macleod and T. Wills
9.20 9.40	1691	Assessment of Tidal Turbine Load Cycles using Synthesised Load Spectra, including Blade-Scale Fluctuations	H. R. Mullings and T. Stallard
9.40 10.00	1744	Effects of turbines deflection over the wake dynamics and turbine performance	C. Gotelli, J. Sandoval, W. Brevis, C. Escauriaza
10.00 10.20	1764	Optimisation of Tidal Lagoon using Genetic Algorithm	J. Xue, R. Ahmadian, O. Jones
10.20 10.40	Coffee Break		
10.40 11.00	1210	The influence of trailing edge profiles on vertical axis turbine blades performance	Nu R. Arini, Stephen R. Turnock, and Mingyi Tan
11.00 11.20	1460	Hydrodynamics of tidal turbine blades	G.T. Scarlett and I.M. Viola
11.20 11.40	1587	Hydrodynamic modelling of flexible tidal turbine blades	Federico Zilic de Arcos, Christopher Vogel, Richard H. J. Willden
11.40 12.00	1653	Unsteady Loading Prediction on Tidal Turbine Blades using Computational Fluid Dynamics	William Finnegan and Jamie Goggins
12.00 12.20	1522	Three-Dimensional Unsteady Hydrodynamic Modelling of Tidal Turbines	Amanda S. M. Smyth, and Anna M. Young
12.20 14.00	Lunch Break		

TUESDAY 3rd

EIA	Environmental impact and appraisal	ROOM AGAVE

CHAIR C. Lanfredi and J. Sundberg

Time	ID	Title	Authors name
14.00 14.20	1413	NoiseSpotter: A rapidly deployable acoustic monitoring and localization system	Kaustubha Raghukumar, Grace Chang, Frank W. Spada, and Craig A. Jones
14.20 14.40	1787	Environmental impacts of marine renewable energy infrastructures: what can we learn from the wind energy sector experience?	Arianna Azzellino, Caterina Lanfredi
14.40 15.00	1617	A novel system for monitoring biofouling and testing antifouling and anticorrosion coatings in offshore renewable energy areas	Andrew Want, Robert Harris, Caitlin Long, and Joanne Porter
15.00 15.20	1745	Environmental monitoring at the Fundy Ocean Research Center for Energy (FORCE)	Daniel J. Hasselman, Melissa E. Oldreive, and James A. Wright
15.20 15.40	**Coffee Break**		
15.40 16.00	1263	Wave farm effects on coastal flooding under climate change	Rafael J. Bergillos, Cristobal Rodriguez-Delgado, and Gregorio Iglesias
16.00 16.20	1800	Relating fish distributions to physical characteristics of a tidal energy candidate site in the Banks Strait, Australia	C. Scherelis, I. Penesis, P. Marsh, R. Cossu, M. Hemer, J. Wright
16.20 16.40	1837	Preliminary study on the effect of tidal current power on salinity distribution in the Zhoushan Area, China	Guizhong Deng, Ye Li, and Zhaoru Zhang
16.40 17.00	1270	Retiring Environmental Risks: Facilitating Marine Renewable Energy Development through Accelerated Consenting	Andrea Copping, Mikaela Freeman, Alicia Gorton
17.00 17.20	1528	The wave-powered adaptable monitoring package: hardware design, installation, and deployment	J. B Joslin, E.D Cotter, P.G Murphy, P. J Gibbs, R. J Cavagnaro, C. R Crisp, A. R Stewart, B. Polagye, P. S. Cross, E.Hjetland, A. Rocheleau, and B. H Waters
17.30 19.00	**CCP-WSI Blind Test Series 2** | Side Event		

Promoted by Plymouth University

Chair: *Deborah Greaves University of Plymouth, UK*

TUESDAY 3rd

ONM	Operations, maintenance and decommissioning	ROOM ELETTRA

CHAIR P. M. Mayorga and P. Contestabile

Time	ID	Title	Authors name
14.00 14.20	1319	Income optimisation of a fleet of tidal lagoons	L. Mackie, F. Harcourt, A. Angeloudis and M. D. Piggott
14.20 14.40	1322	Condition Monitoring for Wave Energy Converters	M. Johanson, A. von Hacht, C. Strang-Moran, J. Hüffmeier, P. Johannesson
14.40 15.00	1323	RiaSoR2: Roadmap for Condition Based Monitoring and Reliability Centered Maintenance	J. Hüffmeier, and P. Ingmarsson
15.00 15.20	1615	Use of HF radar for replicating wave-current combined wave conditions for testing of wave energy converters	D. M. Wang, D. Conley, M. Hann, K. M. Collins and D. Greaves
17.30 19.00	**Powering the Blue Economy** | Side Event		

Wind – Wave – Hybrid Electrical Energy Storage Microgrids

Chair: *Steve DeWitt*

WEDNESDAY 4th

WHM	Wave hydrodynamic modelling	ROOM DIONE

CHAIR G. Giorgi and G. Bracco

9.00 9.20	1384	Optimisation of wave-power arrays without prescribed geometry over incident wave angle	Justin P. L. McGuinness, Gareth Thomas
9.20 9.40	1555	WEC-Sim Array Simulation Development and Experimental Comparison Study	H. Mankle, Y. Yu, B. DuPont
9.40 10.00	1435	Introducing non-rigid body structural dynamics to WEC-Sim	J. Scriven, P. Laporte-Weywada, J. Cruz
10.00 10.20	1681	Mapping review on recurrent modeling techniques applied to Ocean Wave Energy Point Absorbers in the Canary Islands	Lorenzo Banos Hernandez, Alexis Lozano Medina
10.20 10.40	**Coffee Break**		

WEDNESDAY 4th

TRC	Tidal resource characterization	ROOM ELETTRA

CHAIR A. Mason-Jones and G. Benassai

Time	ID	Title	Authors name
9.00 9.20	1766	Influence of grid resolution and bottom roughness on tidal resource characterization in Chacao channel, Chile	Leandro Suarez Atias, Cristian Escauriaza, and Felipe Lucero
9.20 9.40	1243	Wave-turbulence separation with empirical orthogonal function analysis	Michael Togneri, Ian Masters, and Iain Fairley
9.40 10.00	1482	Turbulent flow mapping around a floating in-stream tidal energy platform	M. Guerra, A.E. Hay, R. A. Cheel, G.Trowse and R. Karsten
10.00 10.20	1666	High resolution large eddy simulation for tidal site turbulence characterisation	P. Mercier, M. Grondeau, S. Guillou, J. Thiebot and E. Poizot
10.20 10.40	**Coffee Break**		
10.40 11.00	1315	Web-based atlas to facilitate marine renewable energy site selection in western Canada	Julien Cousineau and Sean Ferguson
11.00 11.20	1485	Assessment of tidal current resources in Banks Strait, Australia	P. Marsh, I. Penesis, J.R. Nader, C. Couzi , R. Cossu
11.20 11.40	1538	A case study of high frequency AD2CP measurements for tidal site characterisation in Banks Straits, Tasmania, Australia	L. Perez, R. Cossu, I. Penesis, A. Grinham, J. R. Nader and C. Couzi
11.40 12.00	1554	Towards characterisation of the Australian national tidal power resource	Mark A. Hemer, Mike Herzfeld, Farhan Rizwi and Uwe Rosebrock
12.20 14.00	**Lunch Break**		

GPG	Grid integration, power take-off and control	ROOM ELETTRA

CHAIR J. Ringwood and G. Giorgi

Time	ID	Title	Authors name
14.00 14.20	1283	Simulation of Digital Displacement Hydraulic Power Take-Off for Wave Energy Converters	Sarah Acheson, Ross Henderson and Daniil Dumnov
14.20 14.40	1313	Power capture gains for the WaveSub submerged WEC using active control	A.J. Hillis, C. Whitlam, A. Brask, J. Chapman and A.R. Plummer
14.40 15.00	1344	Adaptive Collective Control using Consensus Estimation in Arrays of Wave Energy Converters	Shangyan Zou, Ossama Abdelkhalik
15.00 15.20	1418	Excitation force estimation for wave energy systems using a moment-domain representation	Jake Cunningham, Nicol´as Faedo, and John V. Ringwood
15.20 15.40	**Coffee Break**		

CHAIR J.Henriques and G. Bracco

15.40 16.00	1609	Power Control Strategies for a Smoother Power Output from a Wave Power Plant	S. Anttila, D. Cardoso da Silva Júnior, I. Temiz, J. G. Oliveira, J. Leijon, A. Parwal and C. Boström
16.00 16.20	1633	Progress update on the development and testing of an advanced power take-off for marine energy applications	Simon Robertson, Donald R. Noble, Henry Jeffrey, Luca Castellini, and Michele Martini
16.20 16.40	1684	The Design and Build of a 75 kW Linear C-Gen Generator Prototype for Wave Energy Power Conversion	J. Burchell, I. Barajas-Solano, M. Galbraith, N. Ahmed, O. Ubani, & M. Mueller
16.40 17.00	1687	Experimental results of a self-rectifying impulse axial-flow air turbine with fixed guide-vanes	Ana F. F. Ponte, Ana A. D. Carrelhas, Luis M. C. Gato, Joao C. C. Henriques, Antonio F. O. Falcao
17.00 17.20	1596	Power hardware-in-the-loop simulations of grid integration of a wave power park	I. Temiz, A. Parwal, J. Kelly, T. Potapenko, J. Leijon, S. Anttila, J. Hjalmarsson, L. Hebert and C. Boström
17.30 19.00	**Marinet2- MARINERG-i** | Side Event		

EC Marinet2- Marinerg-I project workshop

Chair: *Dr Jimmy Murphy, MaREI, University College Cork*

WEDNESDAY 4th

WEDNESDAY 4th

WHM	Wave hydrodynamic modelling	ROOM DIONE

CHAIR L. Cappietti and F. Arena

10.40 11.00	1232	Multi-directional waves and time domain perturbed field visualization of the WaveSub device	E. Faraggiana, I. Masters, J. Chapman, G. Foster and G. Stockman
11.00 11.20	1651	"Far Field" effects of arrays of wave energy converters in irregular long–crested and short-crested waves: a comparative study	Gael Verao Fernandez, Philip Balitsky, Panagiotis Vasarmidis, Nicolas Quartier, Vasiliki Stratigaki, and Peter Troch
11.20 11.40	1336	Numerical Simulation of a Latching Controlled Heaving-buoy-type Point Absorber by using a 3D Numerical Wave Tank	Sung-Jae Kim, and Weoncheol Koo
11.40 12.00	1388	A submerged point absorber wave energy converter for the Mediterranean Sea	Panagiotis Dafnakis, Mauro Bonfanti, Sergej A. Sirigu, Giovanni Bracco and Giuliana Mattiazzo
12.00 12.20	1799	Laboratory experiments of wave interaction with submerged oscillating bodies	Linda Eckel, Masoud Hayatdavoodi
12.20 14.00	Lunch Break		

CHAIR G. Thomas and R. Archetti

14.00 14.20	1731	WECANet: The first open pan-European Network for Marine Renewable Energy with a focus on wave energy – COST Action CA17105	V. Stratigaki, P. Troch, M. Folley, D. Forehand, E. Loukogeorgaki, L. Rusu, M. Gomez Gesteira, A. Grm, F. Ferri, L. Cappietti, I. Temiz, C. Michailides, G. Lavidas, X. Loizidou and M. Candries
14.20 14.40	1331	Investigation into the Control Strategy for a Long Spine of Edinburgh Duck Modules, using an Efficient Numerical Model	Alfred Cotten and David I. M. Forehand
14.40 15.00	1392	Predicting the Dynamic Characteristics of a Fully Submerged Wave Energy Converter Subjected to a Power Take-Off Failure using a High-Fidelity Computational Fluid Dynamics Model	Toan T. Tran, Aaron M. Krueger, Budi Gunawan, Mohammad-Reza Alam
15.00 15.20	1415	Modelling Wave Interaction with thin porous Structures using OpenFOAM	Anna Feichtner, Ed B. L. Mackay, Gavin Tabor, Philipp R. Thies, Lars Johanning
15.20 15.40	Coffee Break		

TDD	Tidal device development and testing	ROOM CALIPSO

CHAIR S. Ordonez-Sanchez and T. O'Doherty

Time	ID	Title	Authors name
9.00 9.20	1513	Capability Assessment of DTOcean Array Design Tool for Ocean Energy	T. Bloise Thomaz, L. van Velzen, H. Jeffrey, E.i Medina Lope, and T. Wills
9.20 9.40	1734	Data-driven mode for the performance of hundreds megawatt wave energy converter in China: A case study	C. Ni
9.40 10.00	1798	Tide-to-wire model development for realistic tide environments	M.C. Sousounis, J.Praful Tomy, S. Paboeuf and J. K. H. Shek
10.00 10.20	1405	An investigation into Reynolds scaling and solidity for a HATT tidal turbine	M. Allmark, S. Ordonez-Sanchez, S.Wang, Y. Seop Kang, C.H. Jo, T. O'Doherty, C Johnstone
10.20 10.40	Coffee Break		
10.40 11.00	1420	Investigation on the sea-state performance of a horizontal axis tidal turbine designed for less energetic flows	J. I. Encarnacion, C. Johnstone
11.00 11.20	1440	Effects on the Loading of Horizontal Axis Turbines when Operating under Wave and Currents	R. Martinez-Mejia, S. Ordonez-Sanchez, M. Allmark, R. Ellis, C. Lloyd, T. O'Doherty, C. Johnstone
11.20 11.40	1455	Tidal Current Turbine in a Non-Homogeneous Turbulent Inflow: Performance and Near Wake Statistics	A. Vinod and A. Banerjee
11.40 12.00	1325	Physical model study of the wake produced by multiple cross-flow turbines	M. Provan, P. Knox, A. Cornett, J. Cousineau
12.00 12.20	1501	A laboratory study on the effects of waves on the performance and structural deflection of a tidal stream turbine	S.Walker, L. Cappietti, I. Simonetti
12.20 14.00	Lunch Break		

WEDNESDAY 4th

WEDNESDAY 4th

TDD	Tidal device development and testing	ROOM CALIPSO

CHAIR F. Salvatore and L. Cappietti

14.00 14.20	1733	Numerical investigation on the effects of the pitch angle on the efficiency of an Archimedean-type turbine	G. Zitti, F. Fattore, A. Brunori, B. Brunori and M. Brocchini.
14.20 14.40	1830	Numerical study on the energy extraction performance of coupled tandem flapping hydrofoils	Q. Hengliang, X. Chuanli, Z. Xiaoxia, Q. Na, L. Zhen
14.40 15.00	1276	First round of MaRINET 2 Tidal Energy Round Robin Tests: combined wave and current tests	B.Gaurier, S. Ordonez-Sanchez, J.V. Facq, G. Germain, C. Johnstone, R. Martinez, I. Santic and F. Salvatore
15.00 15.20	1212	Hydrodynamic Performance Characterisation of a Tidal Energy Generation System Buoyancy Assembly using CFD	L. S. H. Lai, N. C. Hayes
15.20 15.40	Coffee Break		

SMF	Station-keeping, moorings and foundations	ROOM AGAVE

CHAIR P. Contestabile and C. Eskilsson

Time	ID	Title	Authors name
15.40 16.00	1271	Mooring system reliability analysis of an ORE device using general Polynomial Chaos	Guilherme Moura Paredes, Jonas Bjerg Thomsen, Francesco Ferri and Claes Eskilsson
16.00 16.20	1375	Influence of floater geometry on snap loads in mooring systems for wave energy converters	Johannes Palm and Claes Eskilsson
16.20 16.40	1545	Dynamic loads arising from broken wave impacts on a cylindrical turbine substructure in shallow waters	D. Banfi, A. Raby, and D. Simmonds
16.40 17.00	1712	Integrity and Reliability Testing of a HDPE Taut Mooring System Belt	Philipp R. Thies, Peter Halswell, Marcus Lehmann and Lars Johanning
17.40 19.00	SEATITAN Project Workshop		

Promoted by WAVEC SEA-TITAN

Chair: *Aleix Arenas*

WDD	Wave device development and testing	ROOM PERSEIDE

CHAIR B. Zanuttigh and L. Martinelli

Time	ID	Title	Authors name
9.00 9.20	1699	Submerged Pressure Differential Plate Wave Energy Converter with Variable Geometry	Nathan Tom, Yi-Hsiang Yu, and Alan Wright
9.20 9.40	1703	Submerged horizontal plate used for wave energy extraction and as a potential coastaldefence alternative	M. G. Verduzco-Zapata, F. J. Ocampo-Torres, R. O. Jiménez-Betancourt, and E. Torres-Orozco
9.40 10.00	1559	Enhancement of a 3-DOF submerged wave energy device using bistability	Benjamin W. Schubert, William S. P. Robertson, Benjamin S. Cazzolato, and Mergen H. Ghayesh
10.00 10.20	1533	Experimental visualisation of heave plate flow regimes	Curtis J. Rusch, Brian L. Polagye and Benjamin D. Maurer
10.20 10.40	Coffee Break		
10.40 11.00	1593	Crosscutting open source technology applied to Wave Energy Converters	Aleix Arenas, Francisco García, Nuno Filipe
11.00 11.20	1783	WaveSPARC: Evaluation of Innovation Techniques for Wave Energy	Ronan Costello, Kim Nielsen, Jochem Weber, Nathan Tom and Jesse Roberts
11.20 11.40	1693	Methodologies for testing PTOs under real conditions in the laboratory using actuators and hardware-in-the-loop scheme	M. Lafoz, M. Blanco, J. Nájera, G. Navarro
11.40 12.00	1573	Characterizing the dynamic behavior and performance of a scaled prototype point absorber wave energy converter in a large wave flume	Giorgio Bacelli, Max Ginsburg, Alex Haegmueller and Budi Gunawan
12.00 12.20	1382	Preparing for AMOG's WEC prototype testing at Falmouth Bay Test site - Advancing Technology Readiness Level	H. Marcollo, G. Crossley, P. R. Thies, J. Gumley, L. Johanning
12.20 14.00	Lunch Break		

WEDNESDAY 4th

WEDNESDAY 4th

WDD	Wave device development and testing	ROOM PERSEIDE

CHAIR A. Romolo and C. Lugni

Time	ID	Title	Authors name
14.00 14.20	1446	Lift-based wave energy converters – an analysis of their potential	Matt Folley, Trevor Whittaker
14.20 14.40	1454	Tank Test of an Active Power Rectification in Wave-to-Wire Energy Conversion	Chien-An Chen, Xiaofan Li, Dillon Martin, and Lei Zuo
14.40 15.00	1487	Linear analysis of fluid-filled membrane structures using generalised modes	Anthony McDonald, Qing Xiao, David Forehand, and Ronan Costello
15.00 15.20	1700	Optimization of Shape and Control of NonlinearWave Energy Converters	Jiajun Song, Ossama Abdelkhalik, Shadi Darani
15.20 15.40	**Coffee Break**		
15.40 16.00	1426	Requirements for Realistic and Effective Wave Energy Technology Performance Assessment Criteria and Metrics	Jochem Weber, Ronan Costello, Kim Nielsen and Jesse Roberts
16.00 16.20	1729	Techno-Economical Tools for WEC Scale Optimisation	A. Pichard, C. Wale, A. Rafiee
16.20 16.40	1664	A Set-Based Design Approach for the Design of High-Performance Wave Energy Converters	Ali M. Trueworthy, Bryony L. DuPont, Benjamin R. Maurer, and Robert J. Cavagnaro
16.40 17.00	1643	Influence of resource definition on defining a WEC optimal size	Remy CR Pascal, Felix Gorintin, Gregory S. Payne, David Darbinyan, and Yves Perignon
17.00 17.20	1686	Performance evaluation and analysis of a micro-scale wave energy system	T. R. Mundon
17.30 19.00	**INORE WORKSHOP** | Side Event ***Bursting the bubble:*** ***crossing the boundary between academia and industry*** ***Chair:*** *Giuseppe Giorgi*		

ESP	Economical, social, legal and political aspects of ocean energy	ROOM AGAVE

CHAIR J. Weber and P. Frigaard

Time	ID	Title	Authors name
9.00 9.20	1589	Market, Investments and deployment scenarios for ocean energy in Europe	Davide Magagna, Wouter Nijs and Pablo Ruiz Castello
9.20 9.40	1598	Economic optimisation of large scale tidal stream turbine arrays	Z. L. Goss, S. C. Kramer, A. Avdis, C. J. Cotter, and M. D. Piggott
9.40 10.00	1836	Mechanisms for reducing the cost of tidal stream energy	Daniel S. Coles, Tom Walsh
10.20 10.40	**Coffee Break**		
10.40 11.00	1741	Wave and hydro integration for remote communities: a break-even analysis	Bryson Robertson, Jessica Bekker, and Bradley Buckham
11.00 11.20	1311	Introducing the Theory of Constraints to explore the tidal and marine energy supply chain	R.K. Mason-Jones, P. Davies, and A.J. Thomas
11.20 11.40	1736	Development of PRIMRE, the Portal and Repository for Information on Marine Renewable Energy	Kelley Ruehl, Frederick Driscoll, Andrea Copping, Jon Weers, and Anne Lilje
11.40 12.00	1607	The Bryden Centre for Advanced Energy Research: building critical mass for marine and bio energy development in Northern Ireland, Ireland, and Scotland	Raeanne G. Miller, John Doran, Lilian Lieber, and others in the Bryden Centre
12.20 14.00	**Lunch Break**		

CHAIR J. Weber and V. Nava

Time	ID	Title	Authors name
14.00 14.20	1453	A review of wave energy conversion and its place in the Caribbean region	Kevin G. Lemessy, Krishpersad Manohar and Anthony Adeyanju
14.20 14.40	1486	Offsetting of wave and wind resource and resultant economic benefits: a GB case study	S. Pennock, N. R. K. Bharathi, D. Crooks, H. Jeffrey, P. Möller
14.40 15.00	1516	A novel framework for the Digital Representation of physical and functional characteristics of Ocean Energy Systems	Vincenzo Nava, Pablo Ruiz-Minguela, Jonathan Hodges
15.00 15.20	1728	Novel methodology for holistic assessment of wave energy design options	Pablo Ruiz-Minguela, Jesus M. Blanco, Vincenzo Nava
15.20 15.40	**Coffee Break**		

WEDNESDAY 4th

WEDNESDAY 4th

THM	Tidal hydrodynamic modelling	ROOM DIONE

CHAIR G. Iglesias and L. Blunden

Time	ID	Title	Authors name
15.40 16.00	1295	The Effects of Surge Motion on Floating Horizontal Axis Tidal Turbines	Mohamad H. B. Osman, Richard H. J. Willden, and Christopher R. Vogel
16.00 16.20	1428	Hydrodynamic impact and power production of tidal turbines in a storm surge barrier	Tom S. D. O'Mahoney, Anton de Fockert, Arnout C. Bijlsma and Pieter de Haas
16.20 16.40	1307	Surface profile prediction from bottom pressure measurements with application to marine current generators	A. Compelli, D. Henry and G. P. Thomas

ONM	Operations, maintenance and decommissioning	ROOM CALIPSO

CHAIR P. M. Mayorga and D. Vicinanza

Time	ID	Title	Authors name
15.40 16.00	1512	Evaluation of the forecasting model for wave climate prediction at DanWEC	A. Têtu and J. P. Kofoed
16.00 16.20	1318	The O&M driven design of a multi-row platform tidal project	G. Rinaldi, G.Crossley, R. Parkinson and L. Johanning
16.20 16.40	1632	Improving reliability of tidal turbines: a new step by step methodology for initial quantification of criticality and recommendations	P. M. Mayorga, V. P. Le Diagon, A. I. Mayorga, N. Li, M. Sukendro, J. M. Barranco, M. Dorward and J. E. Hanssen
16.40 17.00	1774	Effective offshore operations in strong tidal currents locations	D. Dhomé, A. Cessou, J. Allo

ROOM ULISSE

17.30 19.00

CoNISMa - TERNA SpA | Side Event

Environmental monitoring for linear marine infrastructures

From design to implementation: new perspectives and new approaches

Organised by CoNISMa with the participation of Terna Rete Italia

Coordinators:

Eng. Francesca Massara (TERNA SpA) - Eng. Annibale Cutrona (CoNISMa)

THURSDAY 5th

SMM	Structural mechanics - materials, fatigue, loadings	ROOM ELETTRA

CHAIR C. Lugni and A. Unich

Time	ID	Title	Authors name
9.00 9.20	1546	A Review of Flexible Structures for Wave Energy Converters	I. Collins, M. Hossain, and I. Masters
9.20 9.40	1583	Structural design and optimisation of a full-scale tidal turbine blade	Y. Jiang, E. Fagan and J. Goggins
9.40 10.00	1599	Characterization of Mode I Interlaminar Properties of Novel Composites for Tidal Turbine Blades	C. Floreani, C. Robert, P. Alam, P. Davies and C. M. ´O Bradaigh
10.00 10.20	1625	Multi-model analysis of tidal turbine reliability	E. Buck, A. MacLeod, E. Nicolas, J.Nuño, M. O'Connor, A. Pacheco, G. Pinon, I. Masters, M. Togneri
10.20 10.40	**Coffee Break**		
10.40 11.00	1252	Preliminary Load Assessment: UMBRA's 250kW EMG Power Take-Off	J. Cruz, M. Atcheson, T. Martins, L. Castellini and M. Martini
11.00 11.20	1332	Quantification of load uncertainties in the design process of a WEC	M. Atcheson, J. Cruz, T. Martins, P. Johannesson, and T. Svensson
11.20 11.40	1365	Towards Reliability-Based Geometry Optimization of a Point-Absorber with PTO Reliability Objectives	C. E. Clark, A. Garcia-Teruel, B. DuPont and D. Forehand
11.40 12.00	1386	Development of the IEC TC114 Technical Specification for mechanical load measurements for Marine Energy Converters	A. Schaap, N. Fyffe, K. Argyriadis, P. Davies, A. Henry, B. Gunawan, F. Driscoll, J. Steynor and P. Scheijgrond
12.00 12.20	1439	Methodology for Fast Iterations of Tidal Turbine Blade Designs using Thermoplastic Composite Materials	R. E. Murray, S.Fu, S. Ordonez-Sanchez, K. Trubac, T. O'Doherty and C. M. Johnstone
12.20 14.00	**Lunch Break**		

ROOM ELETTRA

17.30 19.00

EPSRC DYLOTTA | Side Event

EPSRC DYLOTTA Partners Meeting

Chair: *Prof Tim O'Doherty, CMERG, Cardiff University*

THURSDAY 5th

THM	Tidal hydrodynamic modelling	ROOM DIONE

CHAIR A. Bahaj and D. Dessi

Time	ID	Title	Authors name
9.00 9.20	1341	Comparison of numerical software for predicting the performance of a horizontal axis tidal turbine	Robert Ellis, Joshua Bowman, Matthew Allmark, Shanti Bhushan, David Thompson, Allan Mason-Jones, Tim O'Doherty
9.20 9.40	1390	An Assessment of Efficient Tidal Stream Energy Extraction Using 3D Numerical Modelling Techniques	Mohammed A. Almoghayer and David K. Woolf
9.40 10.00	1517	An efficient numerical framework for the assessment of free surface effects on crossflow tidal turbines	Milo Feinberg, P´al Schmitt, James Donegan and Jarlath McEntee
10.00 10.20	1558	Numerical investigation of shallow-water effects on hydrokinetic turbine wake recovery	O. Elfajri, S. Bhushan, D. Thompson and T. O'Doherty
10.20 10.40	Coffee Break		
10.40 11.00	1402	A stochastic method to account for the ambient turbulence in Lagrangian Vortex computations	C. Choma Bex, C. Carlier, B. Gaston, G. Pinon, G. Germain, E. Rivoalen
11.00 11.20	1618	Modelling the wake of a tidal turbine with upstream turbulence: LBM-LES versus Navier-Stokes LES	M. Grondeau, J.-C. Poirier, S. Guillou, Y. M´ear, P. Mercier, E. Poizot
11.20 11.40	1620	The prediction of high turbulence lift and drag characteristics for use with marine turbine modelling	Matt Edmunds, Ross Gwenter, Alison J Williams, and Ian Masters
11.40 12.00	1650	Lans-α and Leray turbulence models for coastal simulations: application to Alderney Race	Feddy Adong, and Anne-Claire Bennis
12.20 14.00	Lunch Break		

ROOM ULISSE

14.30 17.30	**OES-Environmental Workshop**| Side Event ***Retiring Risks for Environmental Interactions with MRE Devices*** ***Chair:*** *Andrea Copping and Ian Hutchison*

THURSDAY 5th

TRC	Tidal resource characterization	ROOM CALIPSO

CHAIR D. Giudice and A. Mason-Jones

Time	ID	Title	Authors name
9.00 9.20	1669	Estimating Tidal Turbine Resource in Lombok Straits, Indonesia	Ahmad M. Firdaus, Guy T. Houlsby, Thomas A.A. Adcock
9.20 9.40	1768	Resource Assessment for the GEMSTAR Tidal Current Energy Harvester Deployment in the Strait of Messina	F. Balestrino, D.P. Coiro, G. Giannini, D. Giudice, G. Troise
9.40 10.00	1374	Advances in resource characterization in Alderney Race (English Channel)	Alexei Sentchev, Maxime Thiébaut, Lucille Furgerot, Pascal Bailly du Bois, and Mehdi Morillon
10.00 10.20	1646	Surface hydrodynamics of the Alderney Race from HF radar measurements	G. Lopez, A-C. Bennis, Y. Barbin, L. Benoit, R. Cambra, D. C. Conley, L. Mari´e, A. Sentchev, L. R. Wyatt
10.20 10.40	Coffee Break		
10.40 11.00	1363	Global and regional tidal range resource	Simon P. Neill and Peter E. Robins
11.00 11.20	1268	Survey and Numerical Model Analysis for Siting Kilowatt-Scale Tidal Turbines	Robert J. Cavagnaro, Jim Thomson, Trent Dillon, Andy Stewart, Taiping Wang, and Zhaoqing Yang
11.20 11.40	1214	Sensitivity of bathymetry and choice of tidal constituents on tidal-stream energy resource characterization in the Gulf of California, Mexico	Carlos Joel Mejia-Olivares, Ivan D. Haigh, Matt J. Lewis and Simon P. Neill
11.40 12.00	1362	Resource assessment of the marine current developed in the Cozumel Channel	J.C. Alcérreca-Huerta, M. E. Callejas-Jiménez, S. Ordonez-Sanchez, G.Gallegos, M. J. Allmark, C. M. Johnstone, I.Marino-Tapia, T. O'Doherty, R.Silva and L. Carrillo
12.00 12.20	1326	Tidal stream resource assessment with TELEMAC 2D of the Churchill Barriers, Scotland	M. Yousef , V. Venugopal, and L. Johanning
12.20 14.00	Lunch Break		

THURSDAY 5th

WDD	Wave device development and testing	ROOM PERSEIDE

CHAIR M. Buccino and G. Malara

Time	ID	Title	Authors name
9.00 9.20	1343	Reliability Evaluation using Variation Mode and Effect Analysis: Application to CorPower's Mooring Pre-tension Cylinder	P. Johannesson, T. Svensson, H. Gaviglio
9.20 9.40	1534	Comparative study and test on a Wave Energy Point Absorber under various constrains	Xiaofan Li, Qiuchi Xiong, Chien An Chen, Boxi Jiang, Shuo Chen, Khai Ngo, Robert Parker and Lei Zuo
9.40 10.00	1438	An upgraded model for the design of spar-type floating oscillating water column devices	R. P. F. Gomes, J. C. C. Henriques, L. M. C. Gato and A. F. O. Falcão
10.00 10.20	1821	On the experimental study of a concentric wave energy array adapted to an offshore floating platform	Mojtaba Kamarlouei, José F. Gaspar, M. Calvario, T. S. Hallak, M. J. G. C. Mendes, F. Thiebaut, Carlos Guedes Soares
10.20 10.40	Coffee Break		
10.40 11.00	1794	Experimental assessment of a fixed Oscillating Water Column coefficients as a damped harmonic oscillator	I. Bidaguren, I. Albaina, I. Zabala, A. Gómez, J. C. Portillo, J. M. Blanco and J. C. C. Henriques
11.00 11.20	1649	Hardware in the loop test of a U-Oscillating Water Column converter coupled with a Dielectric Elastomer Generator	A. Scialò, G. Moretti, G. Malara, M. Fontana, A. Romolo, F. Arena
11.20 11.40	1737	Development of a near shore WEC for the Brazilian coast	E. Ricarte, L. A. V. Pinto, J. S. Sales Jr., and M. A. V. Freitas
11.40 12.00	1354	Endwall Blade Profile Contouring on Wave Energy Harvesting Impulse Turbine	G. Maurya, R. Raj, A. George, D. Chatterjee, A. Samad
12.00 12.20	1368	Experimental investigations of Turbine Induced Damping for wave energy conversion	R. Raj, R. Anandanarayanan, A. George, G. Maurya, P.V. Dudhgaonkar, A. Samad
12.20 14.00	Lunch Break		

GPG	Grid integration, power take-off and control	ROOM AGAVE

CHAIR G. Bacelli and J. Ringwood

Time	ID	Title	Authors name
10.40 11.00	1591	Implementation of an Energy Extraction Control Including PTO-Losses in a Complete WEC Model for PTO Design Procedure	Miguel Vicente, Marcos Blanco, Jorge Torres, Gustavo Navarro, Luis Garc´ıa-Tabares, Marco Alves, and Marcos Lafoz
11.00 11.20	1449	Moment-Matching-Based Input-Output Parametric Approximation for a Multi-DoF WEC Including Hydrodynamic Nonlinearities	Nicolas Faedo, Yerai Pena-Sanchez, Giuseppe Giorgi and John V. Ringwood
11.20 11.40	1527	Evaluation of predictionless control for wave energy converters	Hancheol Cho, Giorgio Bacelli, Victor Nevarez, Felipe Wilches-Bernal, and Ryan G. Coe
11.40 12.00	1572	Model for evaluating the electric power output of Pressure Retarded Osmosis generation plants	M. Llamas-Rivas, A. Pizano-Martínez, C.R. Fuerte-Esquivel, L.R. Merchan-Villalba and V.J. Gutiérrez-Martínez
12.00 12.20	1822	Optimal power take-off parameters for a bottom-hinged plate wave energy converter	M. Calvário, J. F. Gaspar, M. Kamarlouei, Carlos Guedes Soares
12.20 14.00	Lunch Break		

THURSDAY 5th

	CLOSURE SESSION	ROOM DIONE

14:00 14:30

Prof. Diego Vicinanza | Chairman EWTEC2019

| *Congress Regatta prizegiving*

| *Best Poster Award sponsored by Journal of Marine Science and Engineering (JMSE, ISSN 2077-1312). The winner will be granted one feature paper (free of charge) in JMSE*

| *Introduction of AWTEC, Chul H. Jo, Executive Committee, AWTEC*

| *AWTEC 2020, Irene Penesis, University of Tasmania, Australia*

POSTER SESSION

WRC	1443	**Evaluation of wave energy converter arrays within a sheltered bay** E. N. Gorr-Pozzi, H. García-Nava, M. G. Jaramillo-Torres, M. J. Larrañaga-Fu, F. J. Ocampo-Torres
WRC	1578	**Wave Energy Resource and its Conversion Efficiency along the Coast of Argentina** F. Reale, F.T. Abbondandolo, F. Dentale, A. Di Leo, and E. Pugliese Carratelli
WRC	1594	**The design and construction of a prototype WASP - a novel wave measuring buoy** Mr. Robert Carolan, Mr. Brendan Walsh, Mr. Mark Boland, Dr. Thomas Dooley, Dr. Thomas Kelly
WRC	1811	**Wave energy assessment and spectral analysis: a case study in the Ionian Sea (South Italy)** L. Damiani, G.R. Tomasicchio, M.F. Bruno, A. Saponieri
TRC	1630	**Tidal resource and environmental effects of energy extraction in the Pentland Firth: sensitivity to array layouts and turbulence changes** S. Zazzini, M. De Dominicis, G. Leuzzi, R. O'Hara Murray, X. Li, A. Pini
TRC	1680	**Characterization of in-stream tidal energy resources in the Gulf of California: implementation, calibration and validation of a hydrodynamic model** A. Bermúdez-Romero, V. Magar, M. S. Gross, V. M. Godínez, M. López, E. Rivera-Lemus
WDD	1289	**A novel point absorber wave energy harvester with a Scotch Yoke mechanism** Elie Al Shami, Xu Wang, Zhenwei Liu
WDD	1387	**Array modeling and testing of fixed OWC type Wave Energy Converters** B. Bosma, T. Brekken, P. Lomonaco, B. DuPont, C. Sharp and B. Batten
WDD	1412	**Preliminary results from a scaled test of arrays of point-absorbers with 6 DOF** M. Giassi, S. Thomas, Z. Shahroozi, J. Engstrom, J. Isberg, T. Tosdevin, M. Hann, and M. Goteman
WDD	1383	**Laboratory experiments on the performance of an OWC-WEC: fixed condition versus floating platform-embodied condition** L. Cappietti, I. Simonetti, I. Crema
WDD	1531	**Scale model testing of the WASP - a novel wave measuring buoy** Mr. Mark Boland, Dr. Thomas Kelly, Mr. Robert Carolan, Mr. Brendan Walsh, Dr. Thomas Dooley
WDD	1568	**Interaction of Ocean Wave Energy Converters** B. van Vlijmen, R. Goudswaard, R. Boere, T. Schneider, H. Polinder and G. Lavidas
WDD	1249	**Italian wave energy: state of the art and challenges of exiting pilots** P. Contestabile, G. Mattiazzo, A. Romolo, G. Bracco, F. Arena, D. Vicinanza
TDD	1657	**Tidal resource, turbine wake and performance modelling on the EnFAIT project** Alasdair Macleod, A. Watson, D.Quantrell, S. Porteous and T. Wills
TDD	1723	**Mooring system design for underwater floating tidal current power(TCP) device** Chul-Hee Jo, Su-Jin Hwang, Seong-Ho Jo and Yo-Seop Kang

WHM	1600	**On the calibration of a WEC-Sim model for heaving point absorbers** T. Tosdevin, M. Giassi, S. Thomas, J. Engström, M. Hann, J. Isberg, M. Göteman, E. Ransley, P.H. Musiedlak, D. Simmonds, D. Greaves
WHM	1708	**Comparison of Five Performance Metrics Applied to Five WEC Concepts** R. Costello, M. Jones and B. Kennedy
WHM	1724	**The integration of a hybrid Wave Energy Converter in port breakwaters** L. das Neves, Z. Samadov, E.Di Lauro, K. Delecluyse, P. Haerens
THM	1470	**Experimental investigation into the effects of waves on blade loading for a model scale horizontal axis tidal turbine** P. Gupta, M. Peiris, J. Walker, S. Kosleck and I. Penesis
THM	1540	**Empirical Far Wake Model of a Seabed-Mounted Tidal Turbine** C. Orgiazzi, S. S. Guillou, O. A. Lo Brutto, a. Santa Cruz, C. Mayousse, M. N. Shiekh Elsouk and A. Jean-Marie
THM	1750	**Wake dynamics in a six-bladed horizontal axial turbine through a coupled DES-Actuator Lines Model** J. Sandoval, C. Escauriaza and Cl. Gotelli
THM	1758	**The Effects of Inflow Turbulence Intensity on predicting wake velocity in a two-dimensional RANS-Actuator disc model** C. M. Pang, D. M. Kennedy, and F. O'Rourke
THM	1759	**Tidal current turbine evaluation using blade element momentum theory and computational fluid dynamics** E. J. Yeo, D. M. Kennedy, F. O'Rourke
THM	1760	**A high-resolution operational system for the forecasting of sea state in the Mediterranean and the Black Sea for energy harvesting** G. Sannino, A. Bargagli, A. Carillo, R. Iacono, E. Lombardi, E. Napolitano, M. Palma, G. Pisacane and M.V. Struglia
GPC	1275	**Discussion on the mode mixing in wave energy control systems using the Hilbert-Huang transform** Paula B. Garcia-Rosa, Marta Molinas, and Olav B. Fosso
GPC	1451	**Calculation of PWM Induced Rotor Can Losses in Flooded Generators** F. Wani, U. Shipurkar, J. Dong and H. Polinder
SMM	1507	**Evaluation of Composite Materials for Wave and Tidal Energy Technologies** B. A. Hernandez-Sanchez, J. Nicholas, B. Gunawan, D. A. Miller, G. T. Bonheyo, F. Presuel-Moreno and S. Hughes
EIA	1266	**Developing an Environmental Impact Assessment model for nearshore wave energy devices** M. Apolonia, A. Silva, and T. Simas
EIA	1240	**Effects from Wave Power Generators on the Distribution of two Sea Pen Species on the Swedish West Coast** Anke Bender, Jan Sundberg
ESP	1226	**Wave energy in the Netherlands: Past, Present and Future perspectives** George Lavidas and Henk Polinder

POSTER SESSION

Technical tours and visits

Technical visit of the Natural Marine Energy Laboratory - Thursday 5th Sept

Boarding Time: 15-16, 16-17, 17-18 **>> check your reservation and coupon**

The visit consists in a sailing tour of the Naples harbour main breakwater in which is collocate the Overtopplng Breakwater for wave Energy Conversion (OBREC) pilot.

Meeting point: **Molo Beverello** **>> see map**

Please bring your coupon where will be reported the gate number for the boarding

Technical visit of Towing/Wave Tank of Department of Industrial Engineering - Thursday 5 Sept

Time: 17-18, 18-19 **>> check your reservation and coupon**

Meeting point: Entrance of the DEPARTMENT OF INDUSTRIAL ENGINEERING

Address: **Via Claudio, 21** **>> see map**

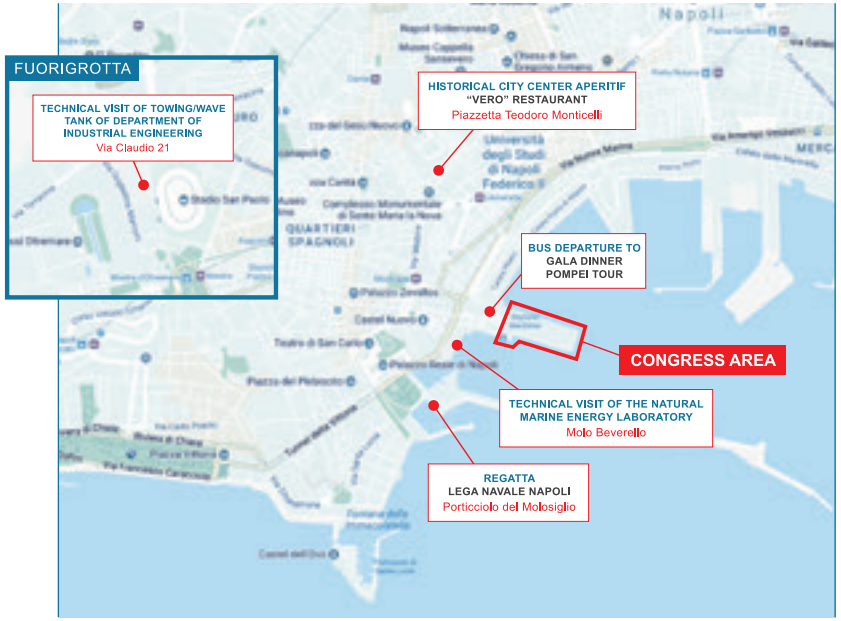

Social programme

2nd EWTEC REGATTA

Sunday, 1st September 2019, from 14:00 to 17:00, in Napoli Gulf (Lega Navale Napoli **>> see map**). Only registered and proved experienced sailors on METEOR class (19.68ft/6.00m) are allowed to participate.

Welcome Reception

Sunday, 1st September 2019, from 19:00 to 22:00, at CENTRO CONGRESSI STAZIONE MARITTIMA, room ABSIDE.

>> Please show your badge at the room ABSIDE entrance.

The Conference registration desk will be open from 17:30 to permit advanced registration of all EWTEC delegates.

Historical City Center Aperitif

Monday, 2nd September 2019, from 19:00 to 22:00. "Vero" restaurant (piazzetta Teodoro Monticelli, 4/5 **>> see map**).

>> Please bring your coupon

Gala Dinner at the Museo di Pietrarsa

Wednesday, 4th Sept. 2019, from 19:00 to 24:00.

Meeting point: Entrance of CENTRO CONGRESSI STAZIONE MARITTIMA.

Several buses will bring you at the Gala Dinner location.

>> Please bring your coupon

Pompei and Napoli tour visit

Friday 6th Sept. 2019, from 08:30 to 16:30

Itinerary:

08:30 > meeting with guide and driver at Stazione Marittima, departure for Pompei
09:15 > arrival to Pompei
09:30 > start of guided visit of Pompei
11:30 > end of visit and departure for Naples
12:30 > arrival and stop for lunch in Naples city center
14:00 > end of lunch e start a guided visit
16:30 > End of visit. Drop off in hotel

>> Please bring your coupon

GENERAL INFORMATION

CONFERENCE DATE & VENUE

The 13th EWTEC will be held from **1st September 2019** to **6th September 2019** at **Stazione Marittima** Molo Angioino - 80133 Napoli - Italy

HOW TO REACH STAZIONE MARITTIMA

From Capodichino Airport

Taxi > The Congress Centre is located 7 km from Naples Capodichino International Airport. The parking area Taxi is in front of the gate of arrivals. With a taxi you can reach the Maritime Station in about 20 minutes. The travel time can change a lot depending on traffic and timetables.

Alibus Shuttle > Alibus is the fast connecting bus line between Capodichino Airport and the City Centre. Alibus makes the following bus stops: Piazza Garibaldi (Central Station) Immacolatella/Porta di Massa and Molo Angioino/Beverello (Stazione Marittima).

From the Central Station

Metro > take the Metro L1 towards Piscinola and get off at the MUNICIPIO stop.

Bus > take the Bus R2 and get off at the Depretis - San Marco stop (about 5 minutes on foot)

Taxi > at the exit of the station there is the the parking of taxis. Travel time is about 15 minutes

OFFICIAL LANGUAGE

The official language of the conference is **English**.

There will be **no simultaneous translation**.

13th ewtec 2019

European Wave and Tidal Energy Conference Series

ewtec.org

Cork (Ireland)
2017

Nantes (France)
2015

Aalborg (Denmark)
2013

Southampton (UK)
2011

Uppsala (Sweden)
2009

Porto (Portugal)
2007

Glasgow (UK)
2005

Cork (Ireland)
2003

Aalborg (Denmark)
2000

Patras (Greece)
1998

Lisbon (Portugal)
1995

Edinburgh (UK)
1993